FAMAT
ENGINEERED VALVES

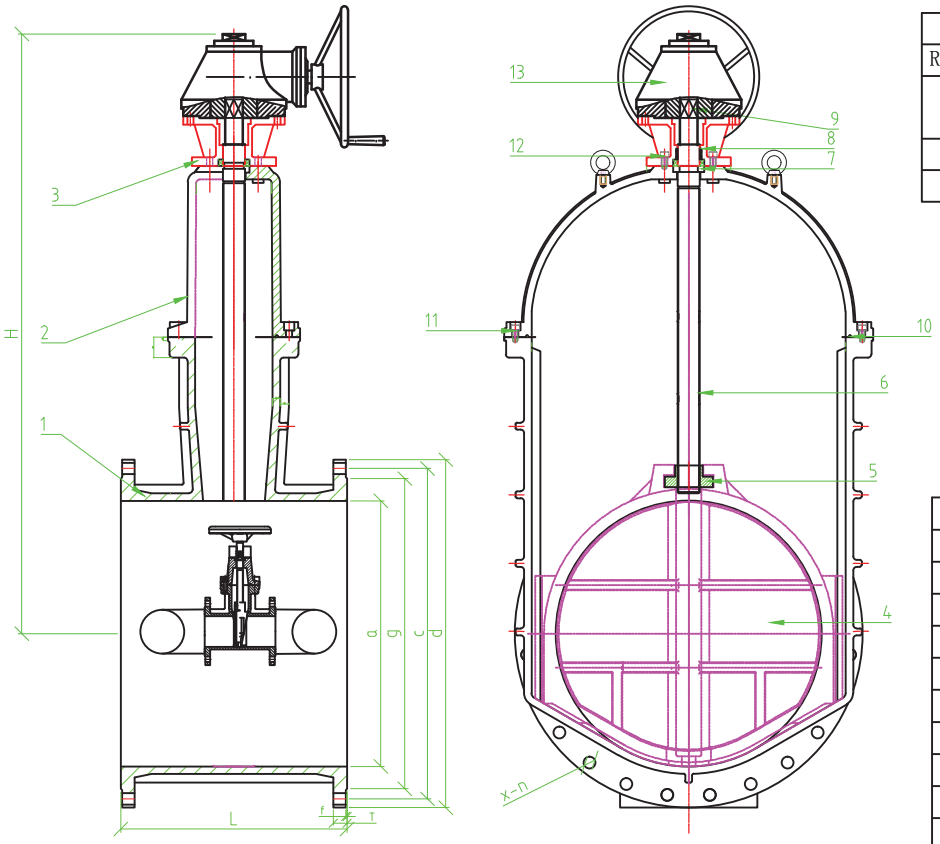

Rated operating presure	PN	1.0/1.6Mpa
Test pressure	Intension	1.5Mpa
	Hermetic	1.1Mpa
Working temperature	T	≤120℃
Applicable media		Water

technical standard:
1, manufacturing standards: DIN EN 1171: 2003 or BS5163
2, structural length standard: DIN EN 558-1
3, flange standard: DIN EN 1092-2
4, test pressure standard: DIN EN 12266-1

Size	DN800
Bevel gear model	BA-1

ITEM	Patr name	Material	Size	Amount
13	Bevel			
12	Bolt	Carbon steel		4-6
11	Bolt	Carbon steel		18-24
10	Gasket	NBR		4
9	Connecting party	Carbon steel		1
8	"O"-ring	NBR		1
7	Holding ring	GGG50 /40		1
6	Stem	SS420		1
5	Stem nut	GGG50 /40		1
4	Disc	GGG50 /40+ NBR		1
3	Stent	GGG50 / 40		1
2	Bonnet	GGG50 / 40		1
1	Body	GGG50 / 40		1

BS5163
GATE VALVE

Technical Parameters PN10/16

DN	L	H	a	d	c	x-n	T	f	g
800	660	1520	800	1015/1025	950	24-ϕ34/24-ϕ40	35/43	5	901