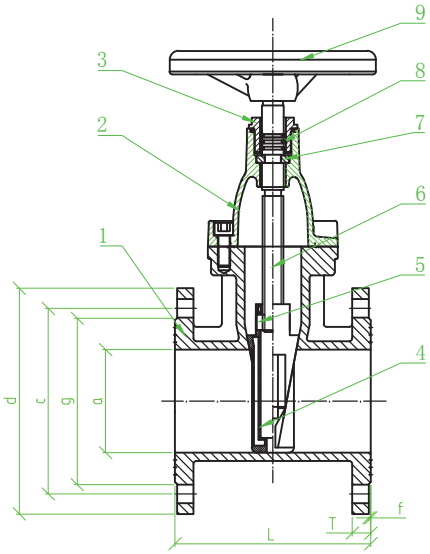

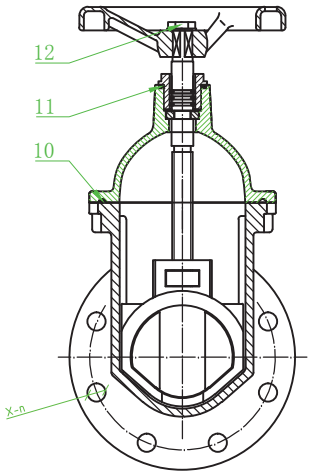

Propeerties of products		
Rated operating presure	PN	1.0/1.6Mpa
Test pressure	Intension	1.5/2.4Mpa
	Hermetic	1.1/1.76Mpa
Working temperature	T	≤120℃
Applicable media		Water

Technical standard:

1, Design&Manufacture: DIN3352
2, Face to Face:DIN3202
3, Inspection&Test:EN12266-1
4, Flange End:EN1092-2

ITEM	Part name	Material	Size	Amount
12	Bolt	stainless steel	DN50-600	1
11	Bolt	Carbon steel	DN50-600	4-6
10	Seals	EPDM	DN50-600	3
9	Handwheel	GGG40	DN50-600	1
8	O Ring	EPDM	DN50-600	1
7	Holding ring	Brass 50-350 GGG40 400-600		1
6	Stem	SS316	DN50-600	1
5	Stem nut	Brass		1
4	Disc	GGG40+EPDM	DN50-600	1
3	Gland	Brass	DN50-600	1
2	Bonnet	GGG40	DN50-600	1
1	Body	GGG40	DN50-600	1

GATE VALVE

FAMAT
ENGINEERED VALVES

Technical Parameters DIN3352 F4 PN16

DN	L	H	a	d	c	x-n	T	f	g
100	190	330	100	220	180	8-ϕ19	20	3	158
150	210	420	150	285	240	8-ϕ23	20	3	212
250	250	600	250	405	355	12-ϕ28	25	3	320